GRAPE

GRAVO EXPORT DISPONIBILIDAD | *AVAILABILITY*

Variedad | *Variety*	Color	Semanas | *Weeks*																																															
		29	30	31	32	33	34	35	36	37	38	39	40	41	42	43	44	45	46	47	48	49	50	51	52	1	2	3	4	5	6	7	8	9	10	11	12	13	14	15	16	17	18	19	20	21	22	23	24	25	26	27	28
Flame Seedless	Roja / Red																																																				
Thompson Seedless	Verde / Green																																																				
Crimson Seedless	Roja / Red																																																				
Red Globe	Globe																																																				
Black Seedless	Negra / Black																																																				
Sugraone	Verde / Green																																																				

GRAPE

GRAVO EXPORT EMBALAJE | *PACKAGING*

Peso | *Weight*	Embalaje | *Package*	Calibre						Cajas | *Boxes*	CTN
8,2Kgs - 18Lbs	Poly CPP	100	300	500	700	900	1000	96	20 Pallet-2,40mt
8,2Kgs - 18Lbs	Pouch Bag	100	300	500	700	900	1000	96	20 Pallet-2,40mt
9,1Kgs - 20Lbs	Clamshell 2lbs							75	20 Pallet-2,40mt
7,2Kgs - 16Lbs	Clamshell 4lbs							85	20 Pallet-2,40mt
9,1Kgs - 20Lbs	Clamshell 5lbs							85	20 Pallet-2,40mt

*Para otros embalajes, por favor contactenos | *For other packaging, please contact us.*

Carton | *Paperboard*
Clamshell 4lbs
Clamshell 5lbs

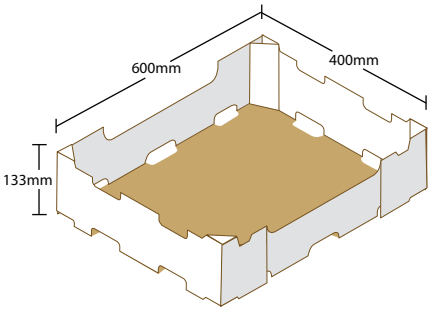

Carton | *Paperboard*
Clamshell 2lbs

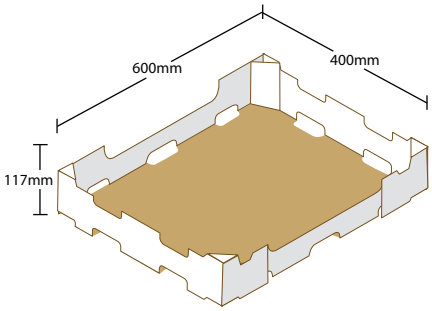

Carton | *Paperboard*
Madera | *Wood*
Poly CPP
Pouch Bag

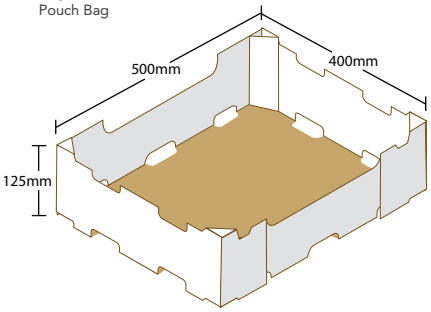

*Las proporciones visuales de este arte son referenciales
Visual proportions of this art are referential

Gravo Export | Tel.: +56 2 2441 1569 | www.gravoexport.cl | contacto@gravoexport.cl
San Antonio 220 Of. 709, Santiago, Chile.